IHP-400 Series

Internal Mount Kiosk & Enclosure Temperature Control System

Product Manual

V01-2

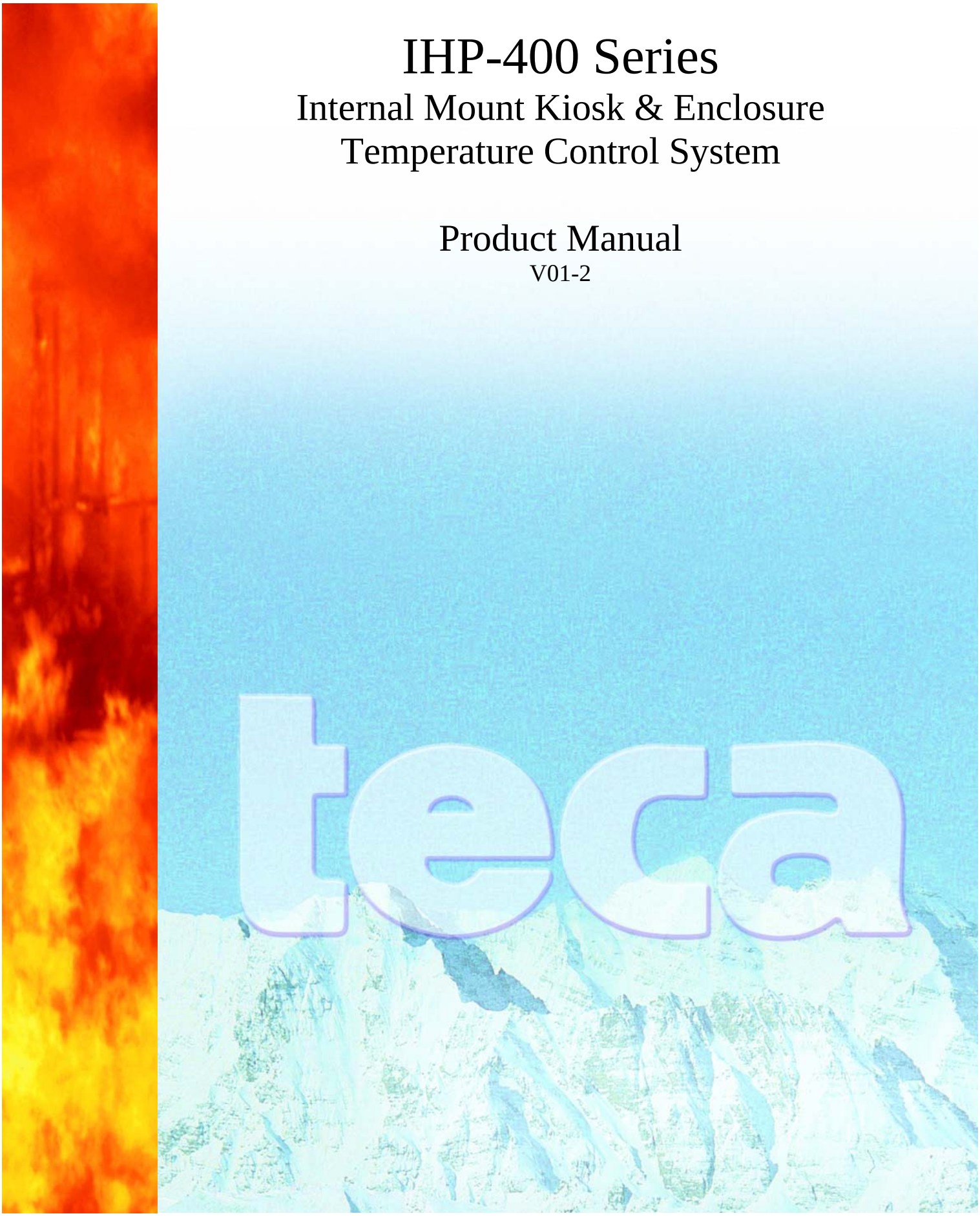

Table of Contents

Page	Description
1	Cover Page
2	Blank Page
3	Table of Contents
4-5	AHP-450 Data Sheet
6-7	AHP-470 Data Sheet
8-9	Dimensional Drawings
10	Typical Field Mounting (Style A)
11	Typical Field Mounting (Style B)
12	Typical Wiring Diagram and Temperature Controller Information
13	Notes
14	Blank Page

IHP-450 | Internal Mount Air Conditioner/Heat Exchanger

Air Cooled	24 VDC
Internal Mounted	High Efficiency
Nema-12, 4, 4X	157 BTU/HR

FEATURES

- Compact (only 17.4" X 8" X 7.8")
- Mounts and operates in any orientation, inside enclosure
- Available in two installation styles:
  - **Style A:** Installs from inside of the enclosure
  - **Style B:** Installs from outside of the enclosure
- Low vibration and noise
- No moving parts except fans
- Environmentally safe
- No compressor, fluorocarbons or filters
- Virtually maintenance-free operation
- Stainless steel housing
- Efficient heat exchanger mode (ECO-Mode)
- Weight 16 LBS.



CONTROL TEMPERATURES

Active Cooling	35 °C
Heat Exchanger (ECO-Mode)	25 °C
Active Heating	10 °C
Typical Hysteresis	5 °C
Operating Ambient	-40/+70 °C
Operating Enclosure	-10/+60 °C

POWER INPUTS

Voltage	24 VDC
Current, Active	2.3 AMPS
Current, ECO-Mode	0.3 AMPS

PERFORMANCE RATINGS

Cooling (Traditional)	157 BTU/HR
Cooling (Din 3168)	46 WATTS
Cooling COP (at L35 L35)	0.83
Heating (Traditional)	> 188 BTU/HR
Heating (Din 3168)	> 55 WATTS
Heating COP	> 1.0

INCLUDES

- Temperature controller
- Mounting gasket
- Mounting hardware
- Power input leads
- Power saving heat exchanger mode (ECO-Mode)

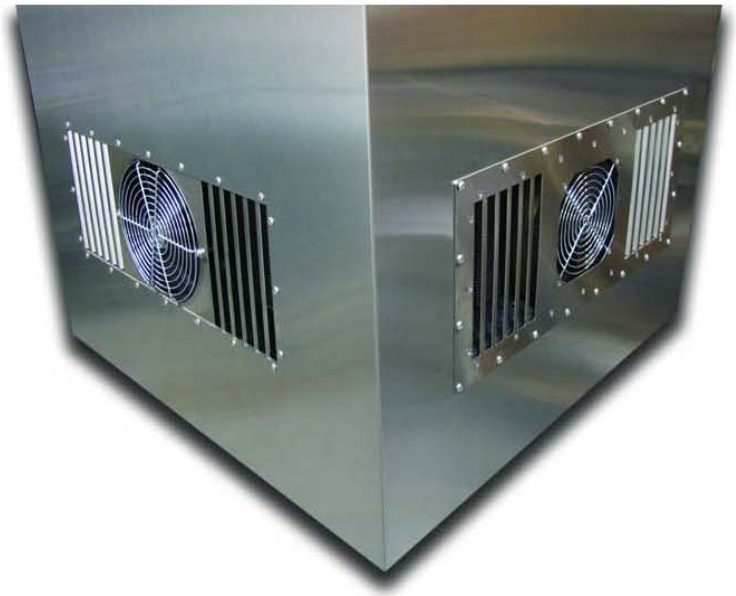

Picture above shows both installation styles
Shown on the left is the **Style A** (installs from inside of the enclosure)
Shown on the right is the **Style B** (installs from outside of the enclosure)

Air Conditioner - Air Cooled

IHP-450

MOUNTING STYLE

Internal Mounted

ENVIRONMENTS SERVED

NEMA-12 IP 52

NEMA-4,4X IP 56

RATING (TRADITIONAL)

157 BTU/hr @ 0 °F ΔT

243 BTU/hr @ +20 °F ΔT

RATING (DIN 3168)

46 Watts L35 L35

14 Watts L35 L50

PERFORMANCE CURVE

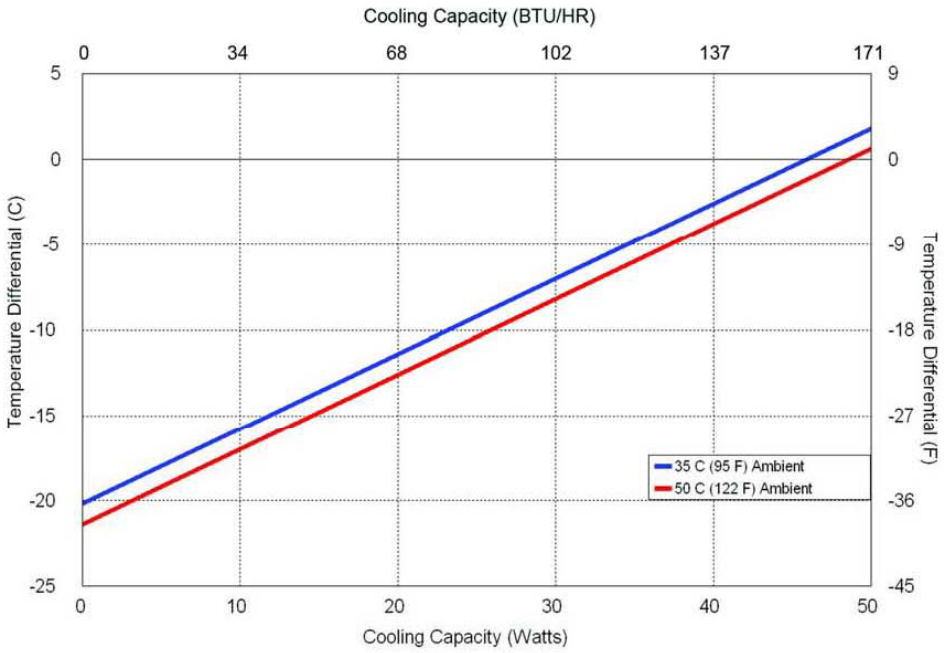

Equation of Line:	y=ΔT(°C)	x=Capacity (Watts)
Ambient Temp	35°C	50°C
IHP-450	y=.44x-20.2	y=.44x-21.4

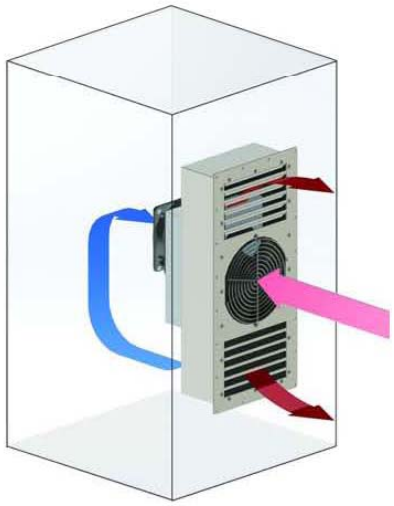

Air Flow Pattern

CONFIGURATIONS

MODEL	PART NUMBER	NOTES	INSTALLATION STYLE	TEMPERATURE CONTROL	ENVIRONMENT
IHP-450	B-F0J5-0-000	Cool only, industrial fans	A	TC-4F	NEMA-12, IP 52
IHP-450HC	B-F095-1-000	Heat/Cool, industrial fans	A	None*	NEMA-12, IP 52
IHP-450HC	B-F0I5-1-000	Heat/Cool, industrial fans	A	TC-7F	NEMA-12, IP 52
IHP-450XE	B-F0J5-4-000	Cool only, sealed hot side fan	A	TC-4F	NEMA-4, IP 56
IHP-450XEHC	B-F095-5-000	Heat/Cool, sealed hot side fan	A	None*	NEMA-4, IP 56
IHP-450XEHC	B-F0I5-5-000	Heat/Cool, sealed hot side fan	A	TC-7F	NEMA-4, IP 56
IHP-450X	B-F0J5-2-000	Cool only, Mil. grade hot side fan	A	TC-4F	NEMA-4X, IP 56
IHP-450XHC	B-F095-3-000	Heat/Cool, Mil. grade hot side fan	A	None*	NEMA-4X, IP 56
IHP-450XHC	B-F0I5-3-000	Heat/Cool, Mil. grade hot side fan	A	TC-7F	NEMA-4X, IP 56
IHP-450	B-F0J5-0-100	Cool only, industrial fans	B	TC-4F	NEMA-12, IP 52
IHP-450HC	B-F095-1-100	Heat/Cool, industrial fans	B	None*	NEMA-12, IP 52
IHP-450HC	B-F0I5-1-100	Heat/Cool, industrial fans	B	TC-7F	NEMA-12, IP 52
IHP-450XE	B-F0J5-4-100	Cool only, sealed hot side fan	B	TC-4F	NEMA-4, IP 56
IHP-450XEHC	B-F095-5-100	Heat/Cool, sealed hot side fan	B	None*	NEMA-4, IP 56
IHP-450XEHC	B-F0I5-5-100	Heat/Cool, sealed hot side fan	B	TC-7F	NEMA-4, IP 56
IHP-450X	B-F0J5-2-100	Cool only, Mil. grade hot side fan	B	TC-4F	NEMA-4X, IP 56
IHP-450XHC	B-F095-3-100	Heat/Cool, Mil. grade hot side fan	B	None*	NEMA-4X, IP 56
IHP-450XHC	B-F0I5-3-100	Heat/Cool, Mil. grade hot side fan	B	TC-7F	NEMA-4X, IP 56

* For controller options contact TECA; Heating function via reverse polarity (controller dependent)

IHP-470 | Internal Mount Air Conditioner/Heat Exchanger

Air Cooled	24 VDC
Internal Mounted	228 BTU/HR
Nema-12, 4, 4X	

FEATURES

- Compact (only 17.4" X 8" X 7.8")
- Mounts and operates in any orientation, inside enclosure
- Available in two installation styles:
  - **Style A:** Installs from inside of the enclosure
  - **Style B:** Installs from outside of the enclosure
- Low vibration and noise
- No moving parts except fans
- Environmentally safe
- No compressor, fluorocarbons or filters
- Virtually maintenance-free operation
- Stainless steel housing
- Efficient heat exchanger mode (ECO-Mode)
- Weight 16 LBS.



CONTROL TEMPERATURES

Active Cooling	35 °C
Heat Exchanger (ECO-Mode)	25 °C
Active Heating	10 °C
Typical Hysteresis	5 °C
Operating Ambient	-40/+70 °C
Operating Enclosure	-10/+60 °C

POWER INPUTS

Voltage	24 VDC
Current, Active	7.0 AMPS
Current, ECO-Mode	0.3 AMPS

PERFORMANCE RATINGS

Cooling (Traditional)	228 BTU/HR
Cooling (Din 3168)	67 WATTS
Cooling COP (at L35 L35)	0.40
Heating (Traditional)	> 572 BTU/HR
Heating (Din 3168)	> 168 WATTS
Heating COP	> 1.0

INCLUDES

- Temperature controller
- Mounting gasket
- Mounting hardware
- Power input leads
- Power saving heat exchanger mode (ECO-Mode)

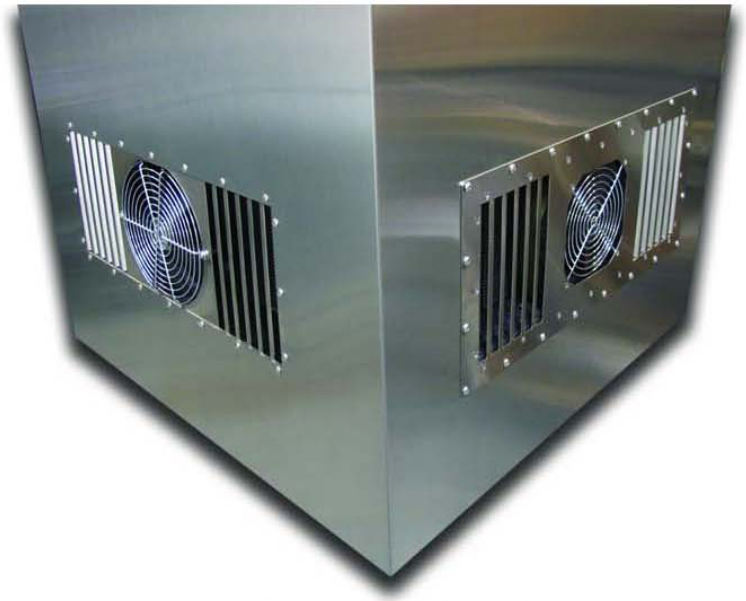

Picture above shows both installation styles
Shown on the left is the **Style A** (installs from inside of the enclosure)
Shown on the right is the **Style B** (installs from outside of the enclosure)

Air Conditioner - Air Cooled

IHP-470

MOUNTING STYLE

Internal Mounted

ENVIRONMENTS SERVED

NEMA-12 IP 52

NEMA-4,4X IP 56

RATING (TRADITIONAL)

228 BTU/hr @ 0 °F ΔT

315 BTU/hr @ +20 °F ΔT

RATING (DIN 3168)

67 Watts L35 L35

36 Watts L35 L50

PERFORMANCE CURVE

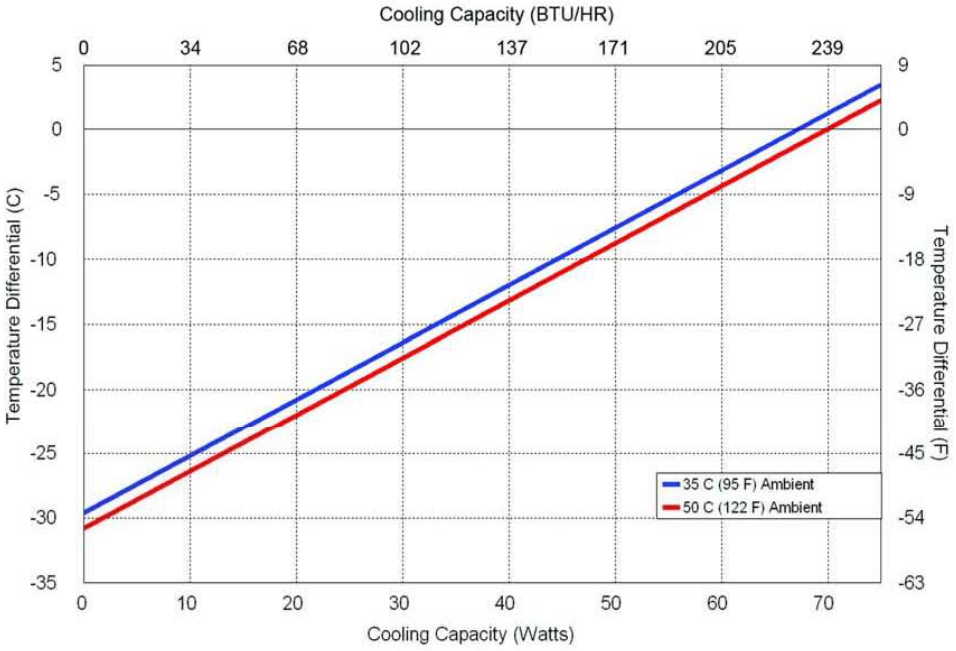

Equation of Line:	y=ΔT(°C)	x=Capacity (Watts)
Ambient Temp	35°C	50°C
IHP-470	y=.44x-29.6	y=.44x-30.8

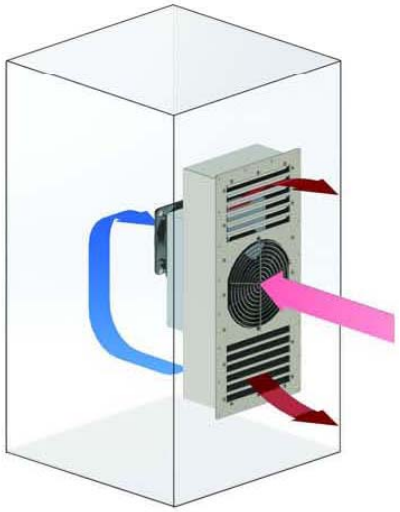

Air Flow Pattern

CONFIGURATIONS

MODEL	PART NUMBER	NOTES	INSTALLATION STYLE	TEMPERATURE CONTROL	ENVIRONMENT
IHP-470	B-F0J5-0-001	Cool only, industrial fans	A	TC-4F	NEMA-12, IP 52
IHP-470HC	B-F095-1-001	Heat/Cool, industrial fans	A	None*	NEMA-12, IP 52
IHP-470HC	B-F0I5-1-001	Heat/Cool, industrial fans	A	TC-7F	NEMA-12, IP 52
IHP-470XE	B-F0J5-4-001	Cool only, sealed hot side fan	A	TC-4F	NEMA-4, IP 56
IHP-470XEHC	B-F095-5-001	Heat/Cool, sealed hot side fan	A	None*	NEMA-4, IP 56
IHP-470XEHC	B-F0I5-5-001	Heat/Cool, sealed hot side fan	A	TC-7F	NEMA-4, IP 56
IHP-470X	B-F0J5-2-001	Cool only, Mil. grade hot side fan	A	TC-4F	NEMA-4X, IP 56
IHP-470XHC	B-F095-3-001	Heat/Cool, Mil. grade hot side fan	A	None*	NEMA-4X, IP 56
IHP-470XHC	B-F0I5-3-001	Heat/Cool, Mil. grade hot side fan	A	TC-7F	NEMA-4X, IP 56
IHP-470	B-F0J5-0-101	Cool only, industrial fans	B	TC-4F	NEMA-12, IP 52
IHP-470HC	B-F095-1-101	Heat/Cool, industrial fans	B	None*	NEMA-12, IP 5
IHP-470HC	B-F0I5-1-101	Heat/Cool, industrial fans	B	TC-7F	NEMA-12, IP 52
IHP-470XE	B-F0J5-4-101	Cool only, sealed hot side fan	B	TC-4F	NEMA-4, IP 56
IHP-470XEHC	B-F095-5-101	Heat/Cool, sealed hot side fan	B	None*	NEMA-4, IP 56
IHP-470XEHC	B-F0I5-5-101	Heat/Cool, sealed hot side fan	B	TC-7F	NEMA-4, IP 56
IHP-470X	B-F0J5-2-101	Cool only, Mil. grade hot side fan	B	TC-4F	NEMA-4X, IP 56
IHP-470XHC	B-F095-3-101	Heat/Cool, Mil. grade hot side fan	B	None*	NEMA-4X, IP 56
IHP-470XHC	B-F0I5-3-101	Heat/Cool, Mil. grade hot side fan	B	TC-7F	NEMA-4X, IP 56

* For controller options contact TECA; Heating function via reverse polarity (controller dependent)

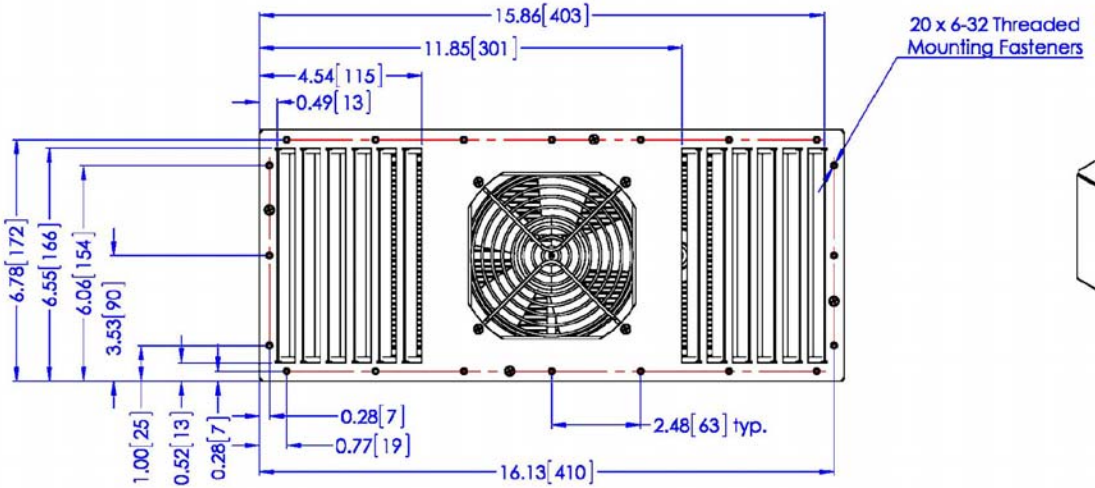

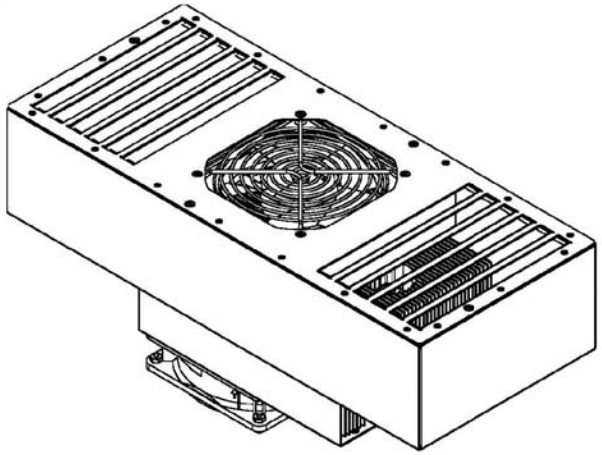

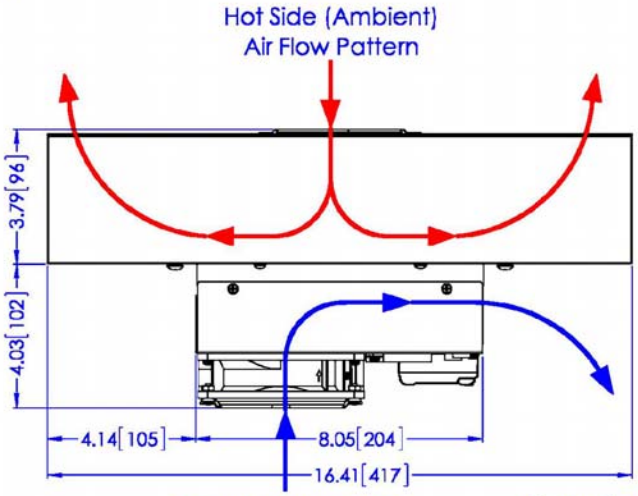

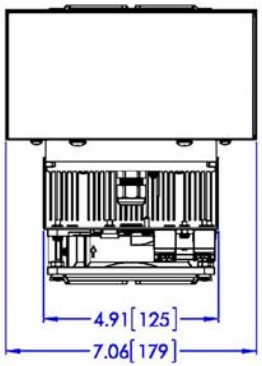

Dimensions: Inches [Millimeters]

UNLESS OTHERWISE SPECIFIED:		NAME	DATE
DIMENSIONS ARE IN INCHES TOLERANCES: FRACTIONAL ± ANGULAR: MACH ± BEND ± TWO PLACE DECIMAL ± THREE PLACE DECIMAL ±	DRAWN	AA	11/18/15
	CHECKED		
INTERPRET GEOMETRIC TOLERANCING PER:	**PROPRIETARY AND CONFIDENTIAL** THE INFORMATION CONTAINED IN THIS DRAWING IS THE SOLE PROPERTY OF TECA CORPORATION. ANY REPRODUCTION IN PART OR AS A WHOLE WITHOUT THE WRITTEN PERMISSION OF TECA CORPORATION IS PROHIBITED.		
MATERIAL			
FINISH			
DO NOT SCALE DRAWING			

teca®
ThermoElectric Cooling America Corporation
Chicago, Illinois U.S.A.

IHP-400 / IHP-500 SERIES
ASSEMBLY (INSTALLATION STYLE A)

SIZE	DWG. NO.	REV
A	SK151147	
	S0415	SHEET 1 OF 1

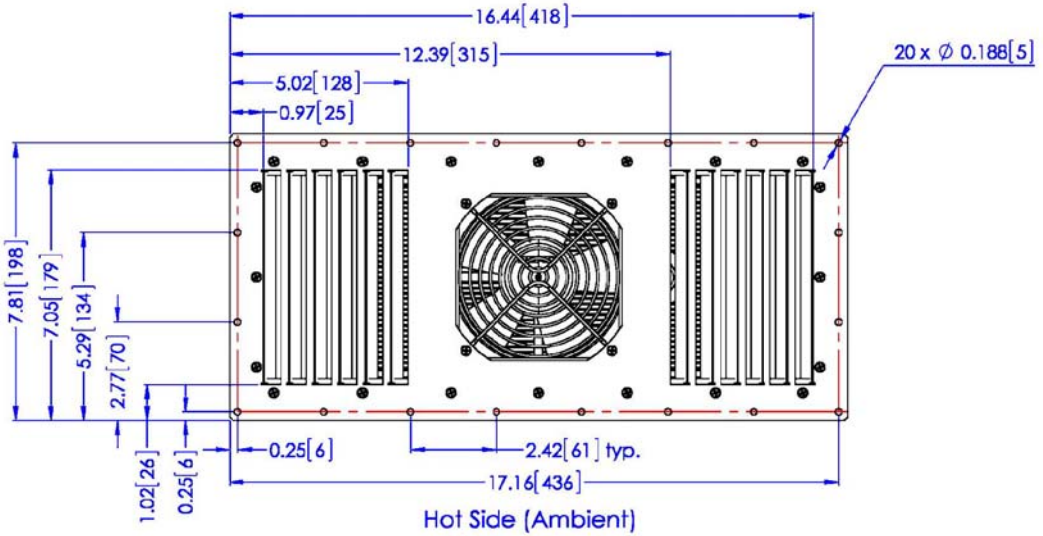

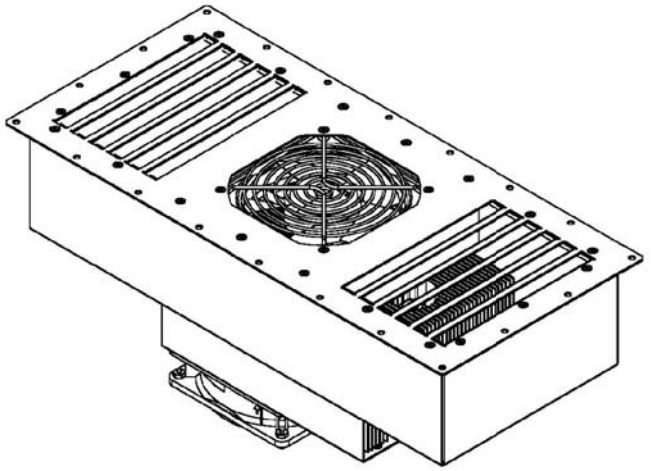

Hot Side (Ambient)
Air Flow Pattern

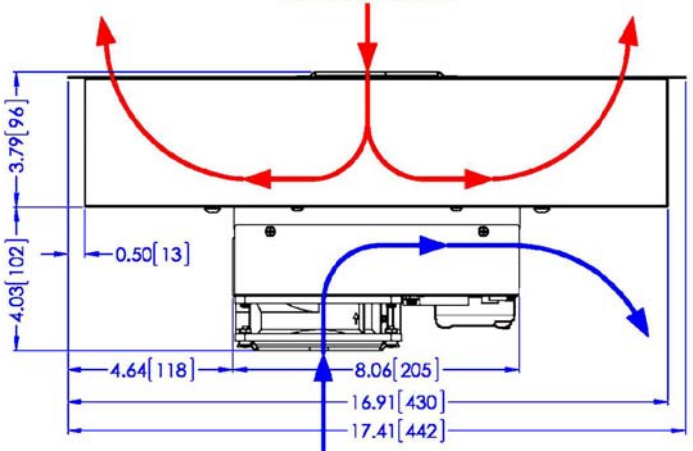

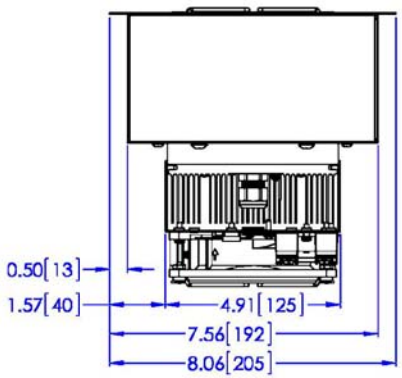

Cold Side (Enclosure)
Air Flow Pattern

Dimensions: Inches [Millimeters]

UNLESS OTHERWISE SPECIFIED:		NAME	DATE
DIMENSIONS ARE IN INCHES TOLERANCES: FRACTIONAL ± ANGULAR: MACH ± BEND ± TWO PLACE DECIMAL ± THREE PLACE DECIMAL ±	DRAWN	AA	11/18/15
	CHECKED		
INTERPRET GEOMETRIC TOLERANCING PER:	**PROPRIETARY AND CONFIDENTIAL** THE INFORMATION CONTAINED IN THIS DRAWING IS THE SOLE PROPERTY OF TECA CORPORATION. ANY REPRODUCTION IN PART OR AS A WHOLE WITHOUT THE WRITTEN PERMISSION OF TECA CORPORATION IS PROHIBITED.		
MATERIAL			
FINISH			
DO NOT SCALE DRAWING			

teca®
ThermoElectric Cooling America Corporation
Chicago, Illinois U.S.A.

IHP-400 / IHP-500 SERIES
ASSEMBLY (INSTALLATION STYLE B)

SIZE	DWG. NO.	REV
A	SK151148	
	S0416	SHEET 1 OF 1

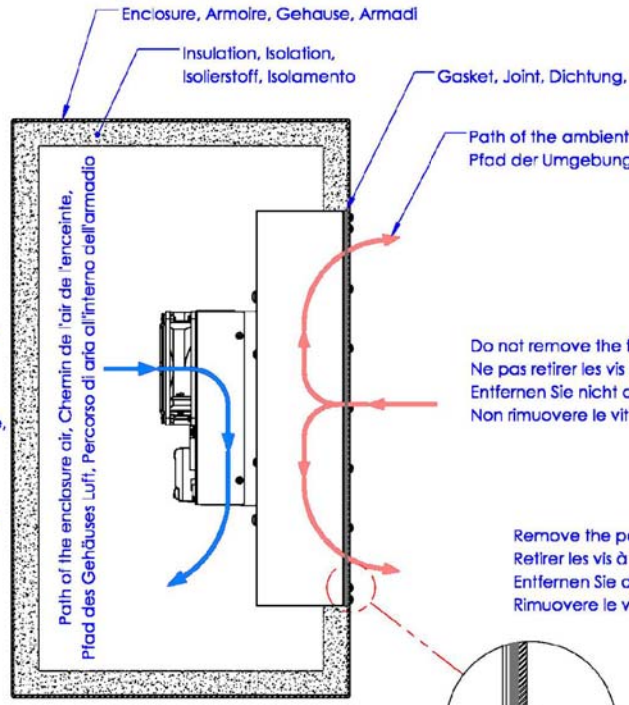

Unit can mount on the top, bottom or side and in any orientation.

L'unité peut monter sur le haut, en bas ou sur le côté et dans une orientation quelconque.

Montieren Sie das Gerät auf der Oberseite, unten oder seitlich. Montieren Sie das Gerät in jeder Position.

L'unità può montare sulla parte superiore, inferiore o laterale e in qualsiasi orientamento.

Install the gasket and clear the mounting holes as shown,
Installez le joint et effacer les trous de fixation comme le montre,
Installieren Sie die Dichtung und deaktivieren Sie die Befestigungslöcher wie gezeigt,
Installare la guarnizione e pulire i fori di montaggio come mostrato

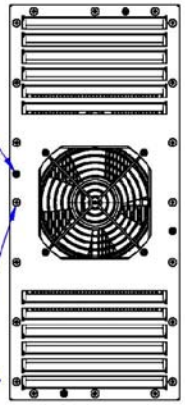

Do not remove the flat head screws,
Ne pas retirer les vis à tête plate,
Entfernen Sie nicht die Flachkopfschrauben,
Non rimuovere le viti a testa piatta

Remove the pan head screws,
Retirer les vis à tête cylindrique,
Entfernen Sie die Zylinderkopfschrauben,
Rimuovere le viti a testa tonda

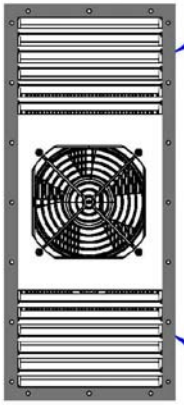

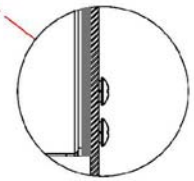

Use Butyl caulking or RTV caulking in place of the gasket for a better seal,
Utilisez Butyl calfeutrage ou RTV en place du joint d'étanchéité pour une meilleure étanchéité,
Utilisez Butyl calfeutrage ou RTV calfeutrage en place du joint d'étanchéité pour une meilleure étanchéité,
Verwenden Butyl abdichten oder RTV Abdichten anstelle der Dichtung für einen besseren Dichtung,
Utilizzare butile mastice o RTV calafataggio al posto della guarnizione per una migliore tenuta

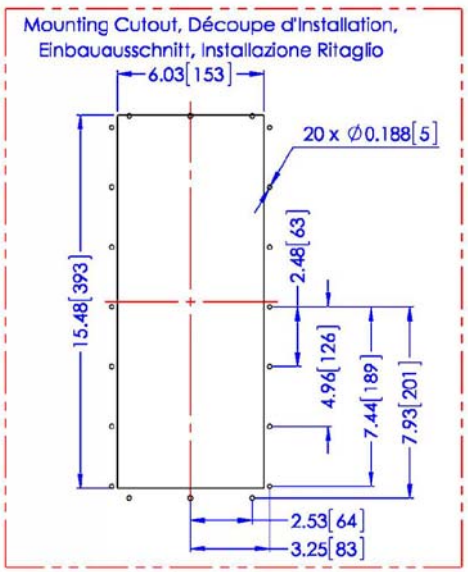

English, Francais, Deutsch, Italiano
Dimensions: Inches [Millimeters]

Typical field mounting IHP series installation style A (installation from inside the enclosure),
Montage typique IHP série Style A Installation (installation à partir de l'intérieur de l'enceinte),
Typische montage IHP-Serie Installations Style A (montage von der Innenseite des Gehäuses),
Tipico di montaggio IHP Serie Stile Installazione A (installazione all'interno dell'armadio)

UNLESS OTHERWISE SPECIFIED:		NAME	DATE
DIMENSIONS ARE IN INCHES TOLERANCES: FRACTIONAL ± ANGULAR: MACH ± BEND ± TWO PLACE DECIMAL ± THREE PLACE DECIMAL ±	DRAWN	AA	11/18/15
	CHECKED		
	PROPRIETARY AND CONFIDENTIAL THE INFORMATION CONTAINED IN THIS DRAWING IS THE SOLE PROPERTY OF TECA CORPORATION. ANY REPRODUCTION IN PART OR AS A WHOLE WITHOUT THE WRITTEN PERMISSION OF TECA CORPORATION IS PROHIBITED.		
INTERPRET GEOMETRIC TOLERANCING PER:			
MATERIAL			
FINISH			
DO NOT SCALE DRAWING			

teca®
ThermoElectric Cooling America Corporation
Chicago, Illinois U.S.A.

IHP SERIES (INSTALLATION STYLE A)

SIZE	DWG. NO.	REV
A	SK151151	

S0419 SHEET 1 OF 1

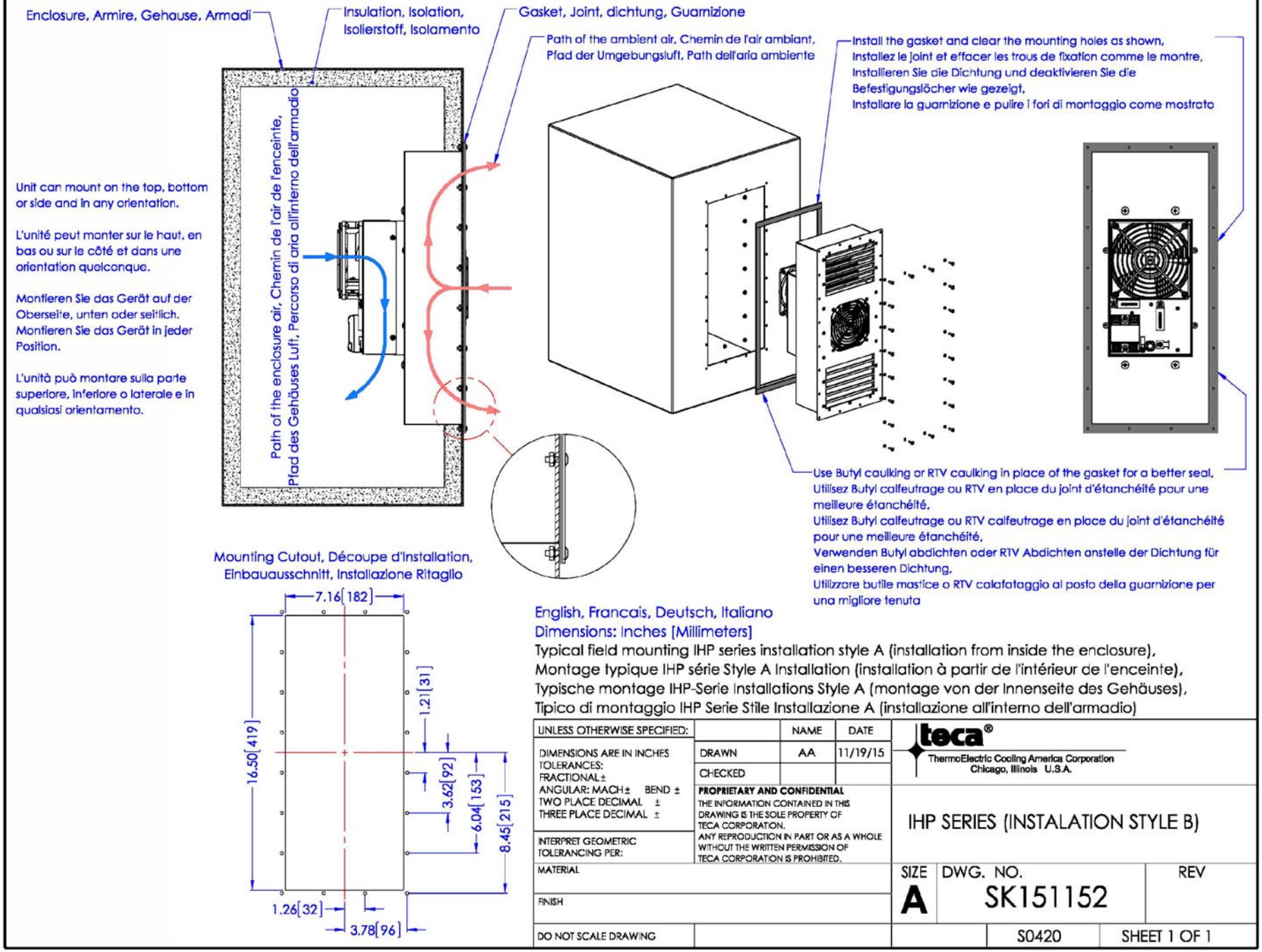

English, Francais, Deutsch, Italiano

Dimensions: Inches [Millimeters]

Typical field mounting IHP series installation style A (installation from inside the enclosure),
Montage typique IHP série Style A Installation (installation à partir de l'intérieur de l'enceinte),
Typische montage IHP-Serie Installations Style A (montage von der Innenseite des Gehäuses),
Tipico di montaggio IHP Serie Stile Installazione A (installazione all'interno dell'armadio)

UNLESS OTHERWISE SPECIFIED:		NAME	DATE
DIMENSIONS ARE IN INCHES TOLERANCES: FRACTIONAL ± ANGULAR: MACH ± BEND ± TWO PLACE DECIMAL ± THREE PLACE DECIMAL ±	DRAWN	AA	11/19/15
	CHECKED		
INTERPRET GEOMETRIC TOLERANCING PER:	**PROPRIETARY AND CONFIDENTIAL** THE INFORMATION CONTAINED IN THIS DRAWING IS THE SOLE PROPERTY OF TECA CORPORATION. ANY REPRODUCTION IN PART OR AS A WHOLE WITHOUT THE WRITTEN PERMISSION OF TECA CORPORATION IS PROHIBITED.		
MATERIAL			
FINISH			
DO NOT SCALE DRAWING			

teca®
ThermoElectric Cooling America Corporation
Chicago, Illinois U.S.A.

IHP SERIES (INSTALATION STYLE B)

SIZE	DWG. NO.	REV
A	SK151152	
	S0420	SHEET 1 OF 1

IHP Series typical wiring
Cool only with TC-4F control

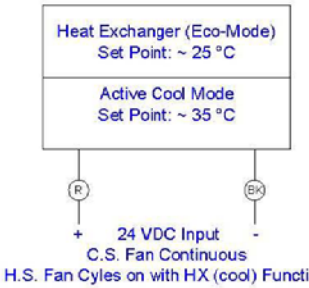

IHP Series typical wiring
Heat/Cool with TC-7F control

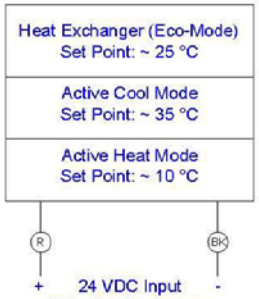

IHP Series factory wiring
Controller: None or customer supplied

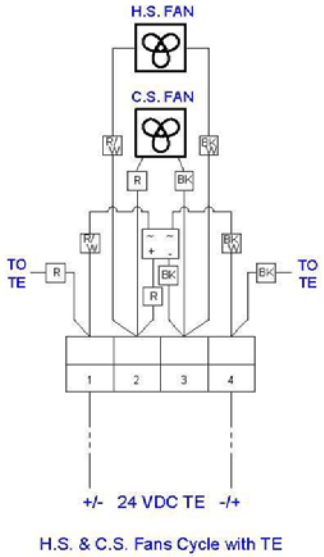

H.S. & C.S. Fans Cycle with TE

IHP Series modified wiring
Controller: None or customer supplied

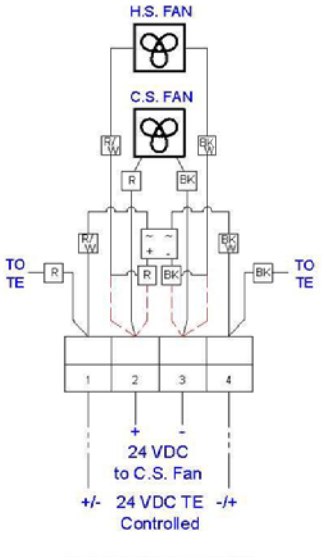

H.S. Fan Cycles with TE

IHP Series modified wiring
Controller: None or customer supplied

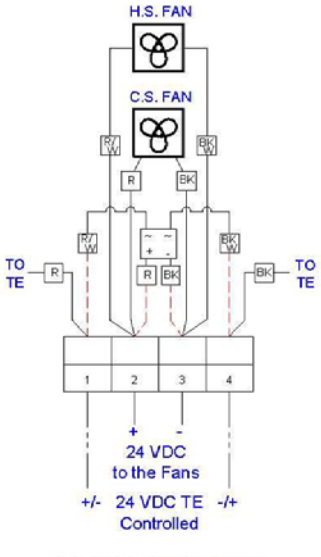

C.S. & H.S. Fan Continuous

- - - - - Indicates wires to be disconnected

REV	DESCRIPTION	Date	APPROVED

INFORMATION DISCLOSED HEREIN IS THE CONFIDENTIAL PROPERTY OF TECA CORP. RECIPIENT SHALL NOT USE THE INFORMATION IN ANY UNAUTHORIZED MANNER.

UNLESS OTHERWISE SPECIFIED DIMENSIONS ARE IN INCHES
TOLERANCES ARE:
DECIMALS .XX +/- .XXX+/-
ANGLE +/-
FRACTION +/-

FINISH:

MATERIAL:

THERMOELECTRIC COOLING AMERICA CORP.

IHP SERIES
TYPICAL WIRING DIAGRAM AND
TEMPERATURE CONTROL INFORMATION

DRAWN BY:	DRAWING #	REV LEVEL
AA	SK151153	
DATE: 11/23/15		
S0421	SCALE	MASTER: MASTER / SHEET

Notes